Testing the Rover V8 Ignition Amplifier Module

The secretive Ignition Amplifier with a typical life-time of 60-100,000 miles is too frequently responsible for scaring average RV8 home enthusiasts into willy-nilly replacement when faults occur for which it is simply not responsible! How often is heard "I bought a new amplifier but the engine is still faulty!" The answer lies in an independent test to determine its condition before replacing it. To put things into context, the amplifier is merely a switch, similar in function to points on earlier ignition systems and the following elegant test uses a few simple items and some bits of wire that any home enthusiast might cobble together:

- Join a 1.5V pen-cell in series with a (say) 2700 ohm resistor and two flying leads.
- With coil/amplifier connected normally, remove king lead from the distributor cap.
- Connect the king lead to a spare spark plug laying on a metal part of the engine.
- Disconnect the two pick-up coil signal wires from the amplifier.
- Connect one flying lead to one amplifier input terminal.
- Switch the ignition ON but do not crank.
- Touch the second flying lead briefly to the other amplifier input terminal.
- The amplifier should activate the coil and produce a good spark at the spark plug.
- Repeat and observe the sparks coincide with the simulated input signal.
- Pen-cell polarity is non-critical as neither lead is connecting to earth.
- The pulsing voltage from the pen-cell triggers the amplifier without causing damage.
- Instead, connect a 12V 21W bulb in place of the coil and observe the flashing bulb.
- If sparks (or bulb flashes) occur in sympathy, the module is working correctly.
- A disadvantage testing the amplifier using a spark plug is the coil may be faulty.
- The more definitive amplifier test is to use the mentioned bulb as a substitute load.

Alternatively, make an "off car"amplifier test box with 2 switches, a holder for the 12V 21W bulb, 1.5V pen-cell, 2700 ohm resistor, 2 connections for a 12V battery, 4 small female spade flying leads to connect to the amplifier terminals and a crocodile clipped lead to earth the module body. Hook up the battery and amplifier, switch on and toggle the test switch repeatedly to emulate a pulsed input from the pickup coil whilst observing the bulb flash in sympathy.

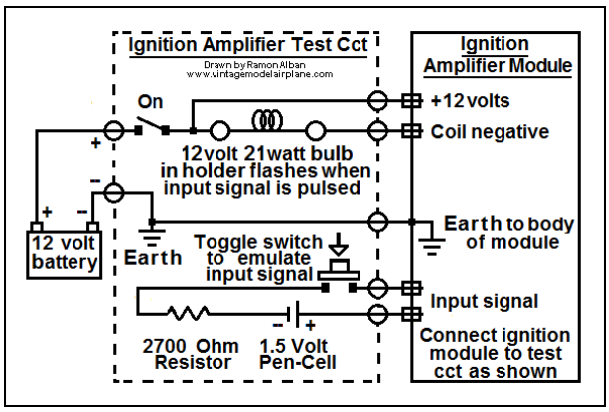

Premature ignition amplifier failure commonly occurs following incorrect assembly after removal for any reason. A thin smear of thermal conducting paste must be used on thoroughly clean surfaces to allow internal module heat to transfer efficiently to its metal mounting area on the side of the distributor or inside the remotely mounted module. More here

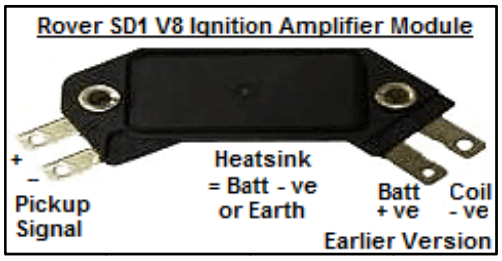

http://www.vintagemodelairplane.com/pages/Downloads/Rover_Tasters/Ignition02.html

Ramon Alban www.vintagemodelairplane.com